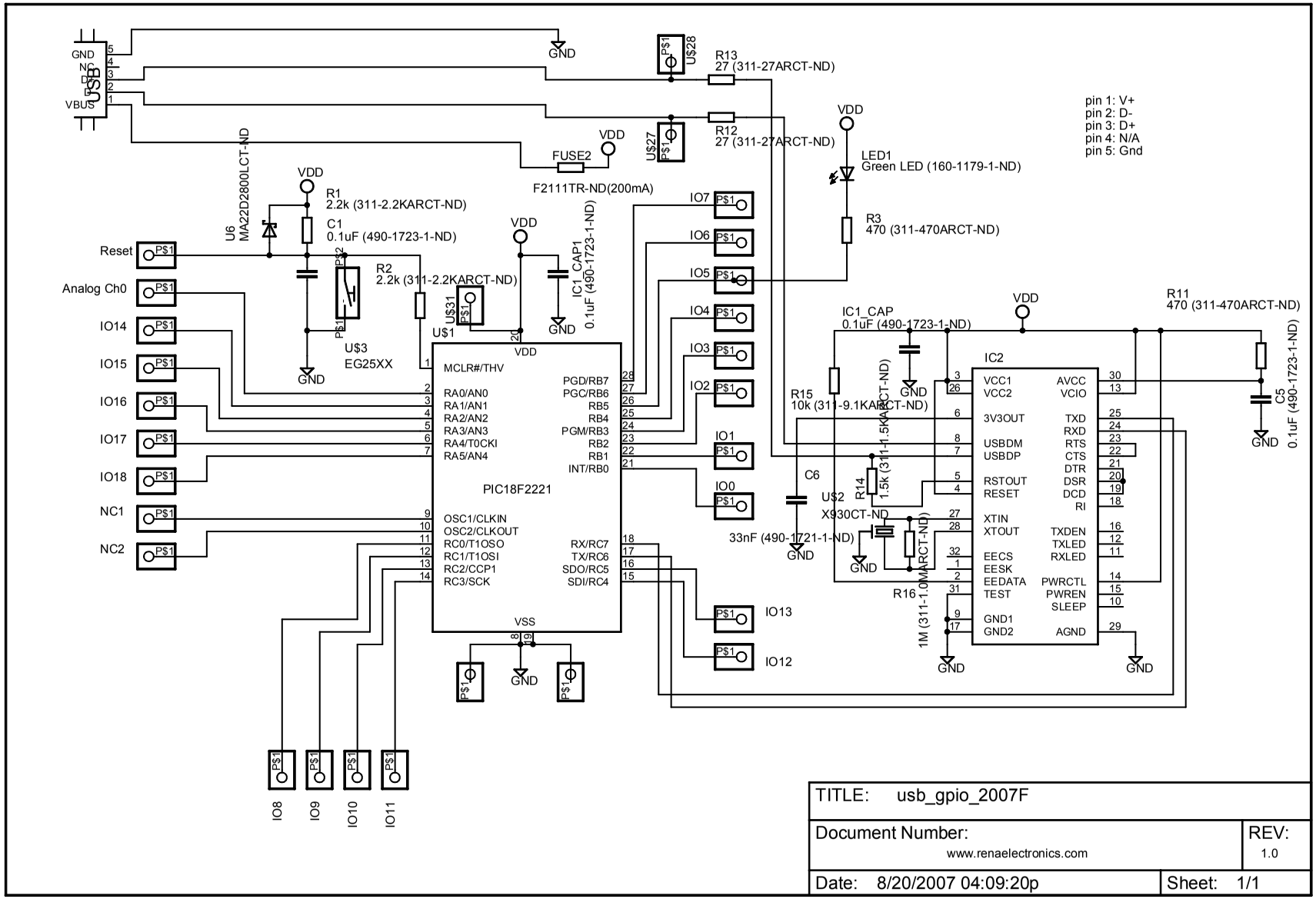

TITLE: usb_gpio_2007F		
Document Number: www.renaelectronics.com		REV: 1.0
Date: 8/20/2007 04:09:20p	Sheet: 1/1	